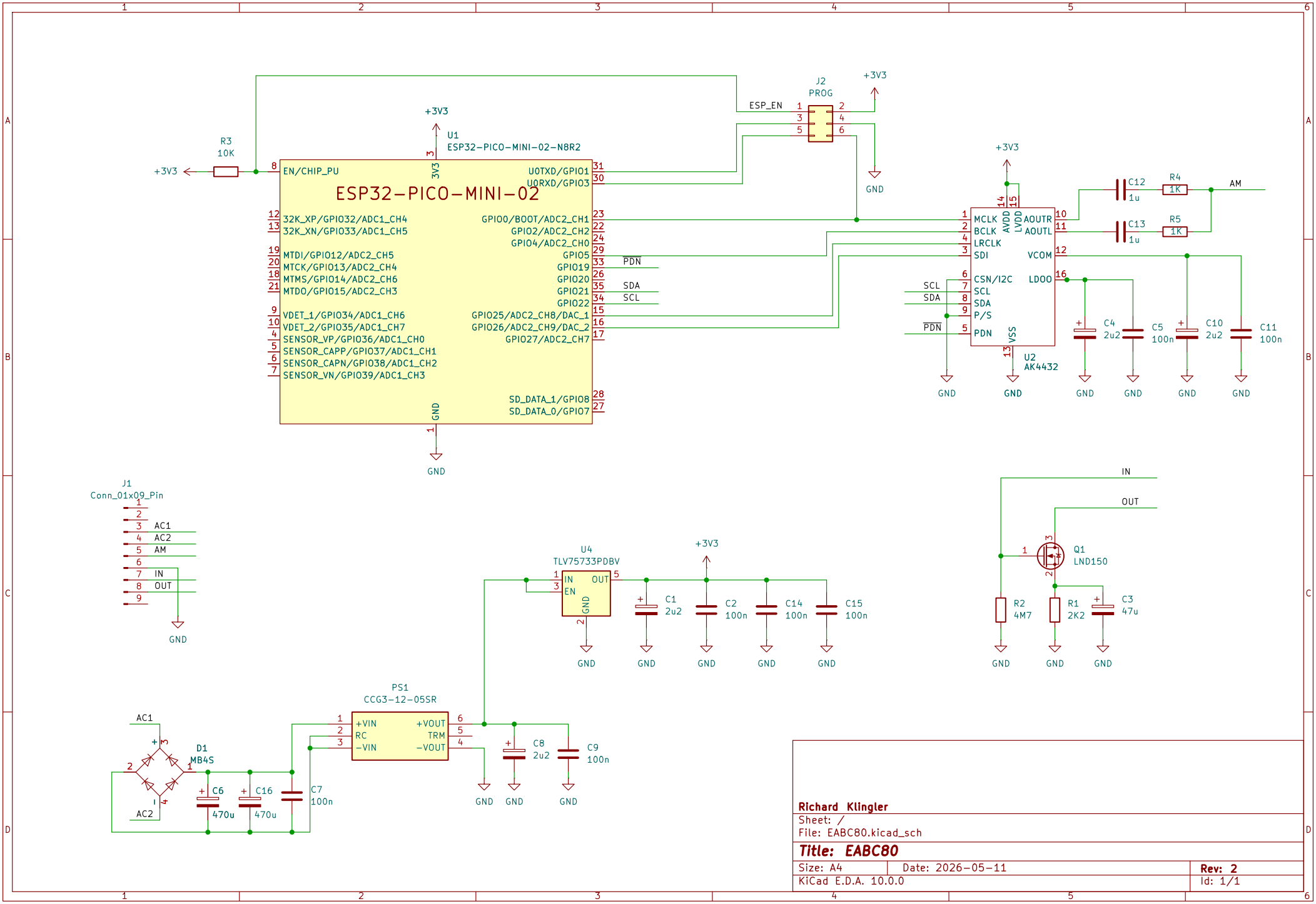

Richard Klingler

Sheet: /

File: EABC80.kicad_sch

Title: EABC80

Size: A4	Date: 2026-05-11	Rev: 2
KiCad E.D.A. 10.0.0		Id: 1/1